FOR-1754 Rev.1.1

Pitch Range In mm			Nominal Dimension Range In mm					— ⌒ ▱
TO 6	Over 6 TO 10	Over 10 TO 24	TO 30	Over 30 TO 60	Over 60 TO 100	Over 100 TO 150	Over 150	0.1/10 ∠
±0.15	±0.20	±0.30	±0.30	±0.50	±0.70	±1.00	±1.30	±2°

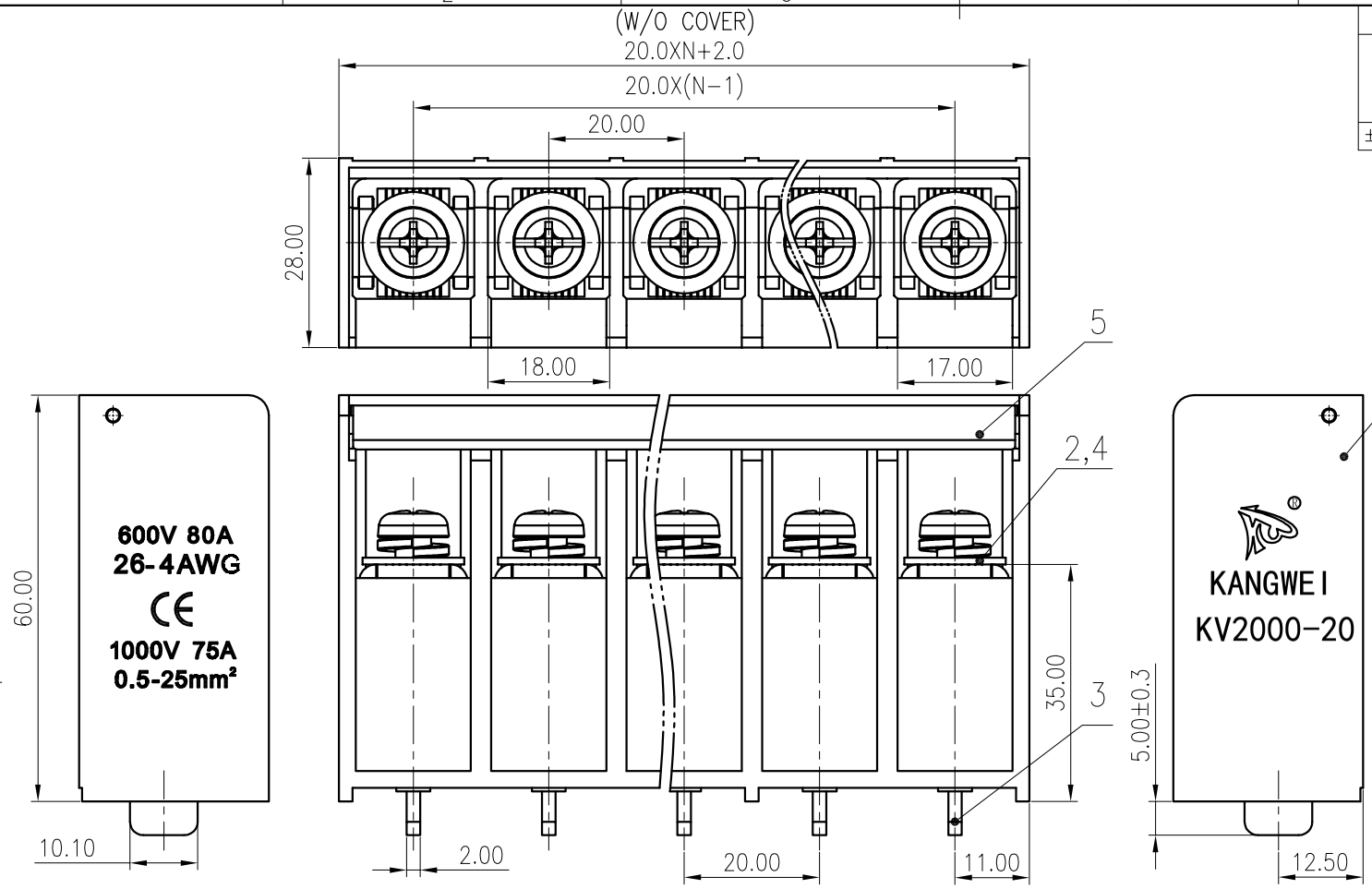

ITEM	NAME OF PART	MATERIAL	NOTES
5	Transparent cover	PC	UL94V-2
4	Screw	Steel	Ni Plated
3	Pin header	Copper Alloy	Sn Plated
2	Nut	Steel	Ni Plated
1	Housing	PBT	UL94V-0

	B	C	D
UL 标准/UL Standard:			
额定电压/电流/Rated Voltage(V)/Current(A)	600/80	600/80	600/5
EC 标准/IEC Standard:			
过压类别/Overvoltage Category/污染等级/Pollution Degree	Ⅲ/3	Ⅲ/2	Ⅱ/2
额定电压/电流/RatedVoltage(V)/Current(A)	1000/75	1000/75	1000/75
螺丝扭矩/Torque Tightening(N·m/Lb.in)	M6, 2.9/26		
线径范围(软线)/Wire Range(flexible)(AWG)	26~4		
间距/Pitch(mm)/线数范围/Poles	20.00/N=02~12P		
剥线长度/Stripping length(mm)	17		
使用温度范围/Operating temperature(°C)	-40~+120		
符合RoHS环保要求/Conform to RoHS	Yes		

PCB LAYOUT

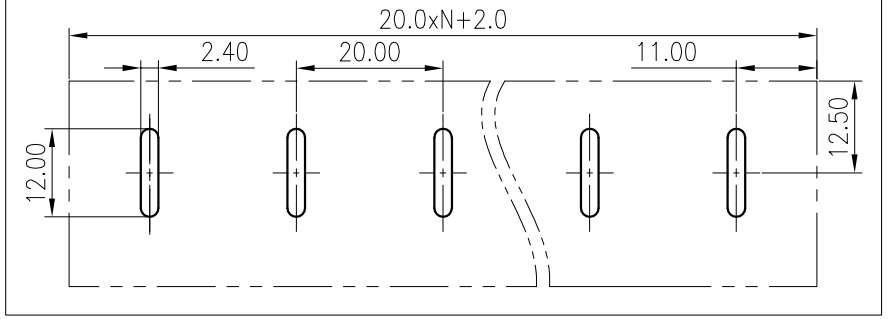

MATERIAL: /	SURFACE: /		
MAT NO.: /	KANGWEI 康伟电子有限公司		
STATUS: /			
APPD:	NAME: KV2000-20.0		
CHKD:			
DRFT: CENGMZ_2023.08.18	DRAWING NO.: KV2000-20.0	REV	T0-1
SIZE: A4	mm (inch)	TYPE: CUSTOMER_DRAWING	SCALE: 2:1	SHEET	1/1

REV	ECN	DESCRIPTION	DRFT	DATE